LAMPASAS TEXAS

CURB INLET RING AND COVER

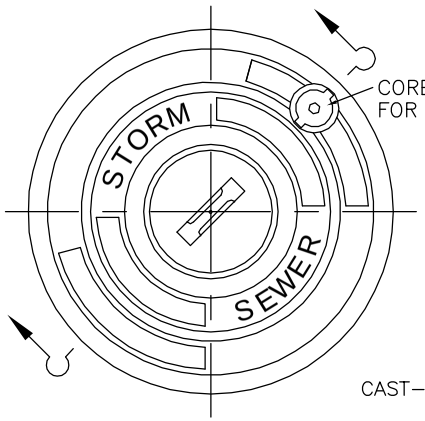

TOP VIEW

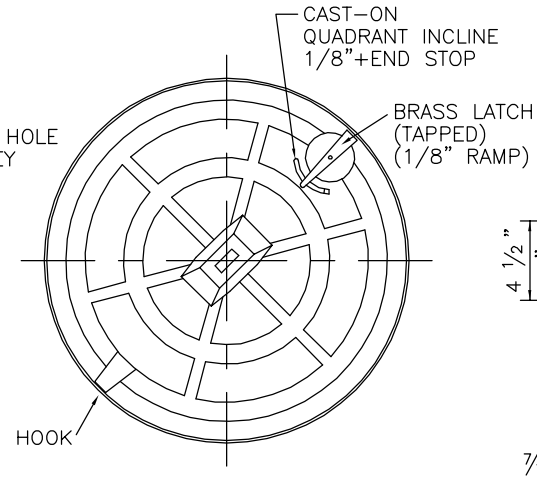

BOTTOM VIEW

18" MANHOLE FRAME
SCALE: 1"=1'

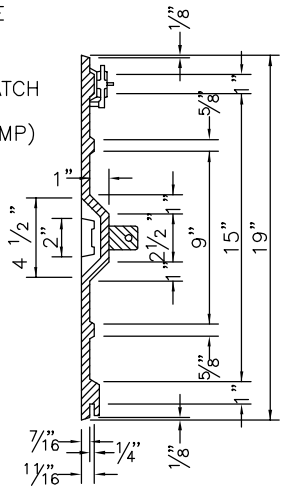

SECTION

TABLE OF QUANTITIES FOR 18" OUTLET PIPE

REINFORCING STEEL QUANTITIES					
BARS	NUMBER	SIZE	SPACING	LENGTH	WEIGHT
A	15	4	9"*	7'-0"	73
B	4	4	10"	10'-8"	29
C	7	4	18"	2'-6"	12
D	5	6	6"	10'-8"	80
E	6	4	12"	2'-6"	10
F	3	4	10"	13'-0"	35
G	11	4	12"	4'-3"	31
H	1	6	--	13'-0"	20
J	7	4	12"	10'-8"	50
K	30	4	9"*	2'-7 1/2"	52
L	6	4	12"*	4'-4"	17
M	4	4	--	1'-8"avg.	4
TOTAL STEEL, LB.					413
TOTAL CONCRETE, CY.					4.06

*EXCEPT AS SHOWN ON PLANS

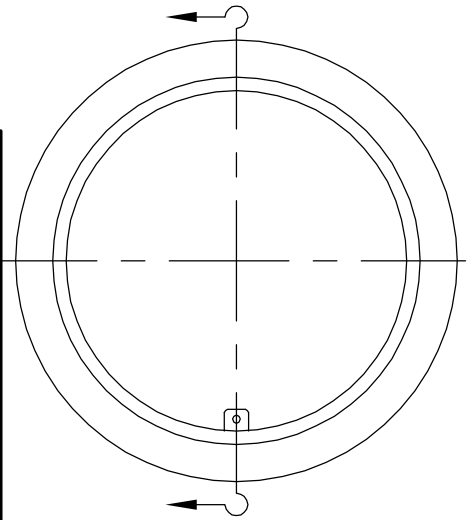

TOP VIEW

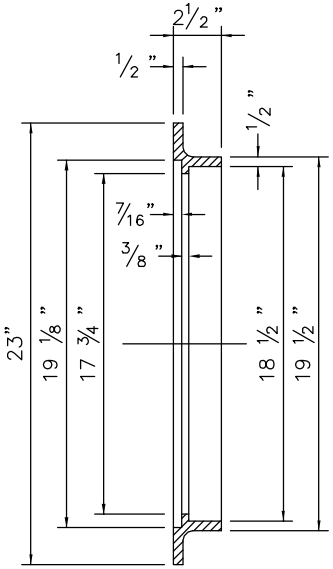

SECTION

18" MANHOLE FRAME
SCALE: 1"=1'

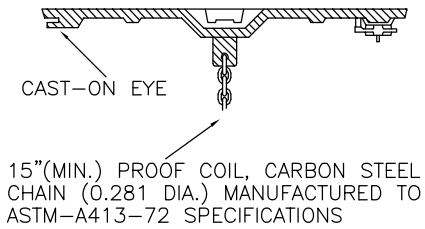

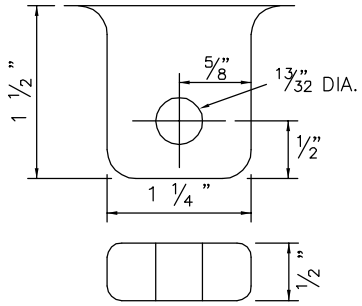

CAST-ON EYE AND COVER CHAIN DETAIL

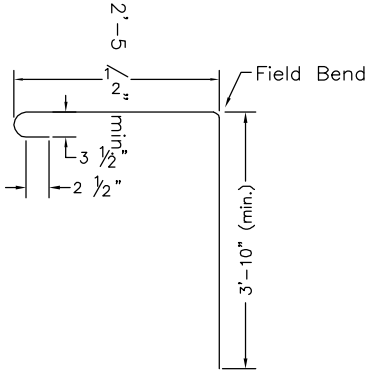

BARS A
NO SCALE

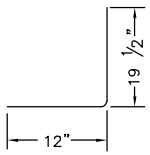

BARS K
NO SCALE

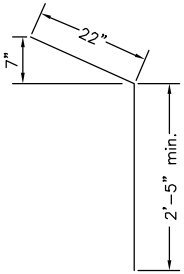

BARS G
NO SCALE

DETAIL DEPICTS DIMENSIONAL REQUIREMENTS. THE ARCHITECT/ENGINEER ASSUMES RESPONSIBILITY FOR THE APPROPRIATE USE OF THIS STANDARDS.

STANDARD CONSTRUCTION DETAILS
PAVING

DATE: MARCH 2007
SCALE: NTS
SHEET: SD-P25B