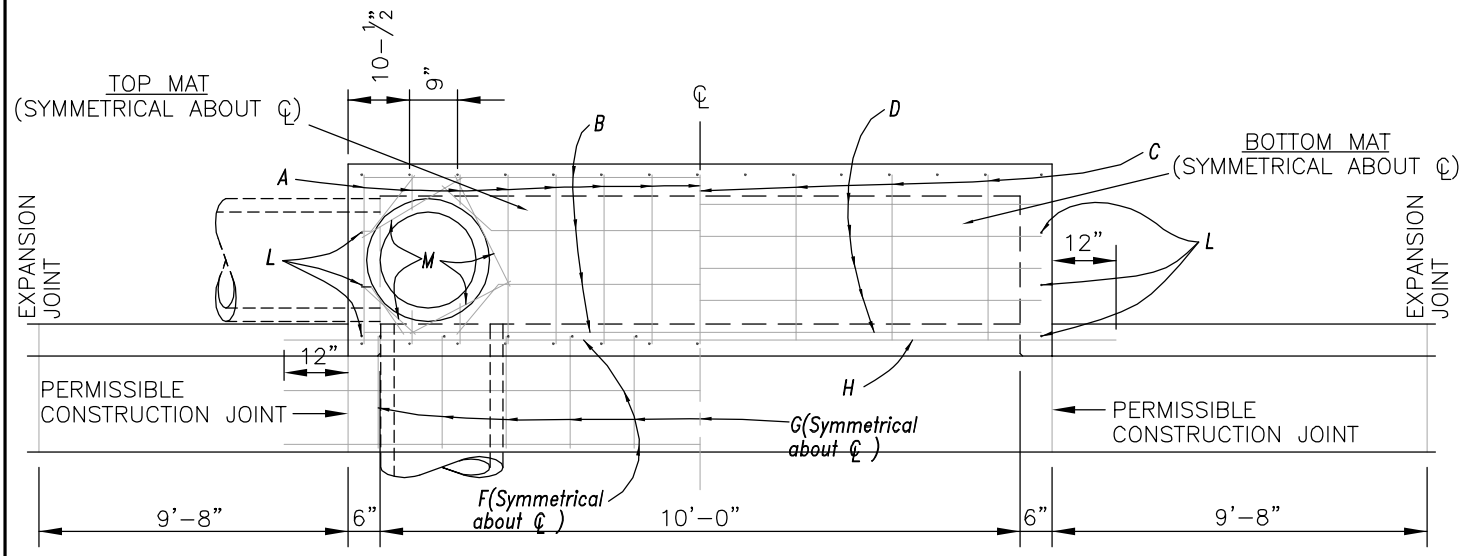

GENERAL LAYOUT

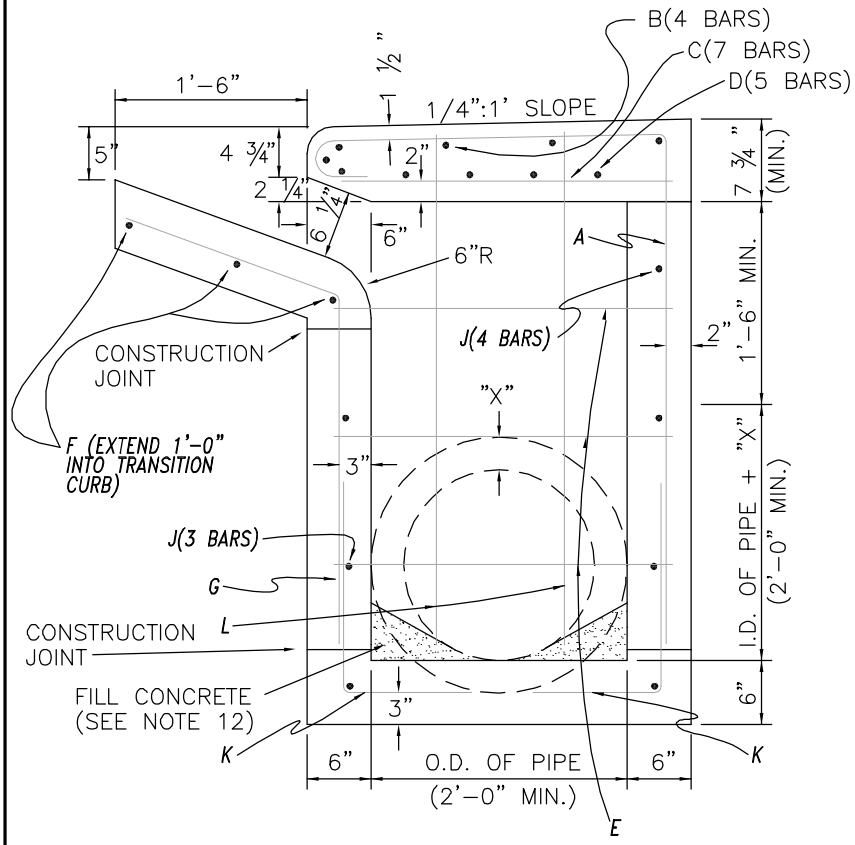

ELEVATION–SECTION

SCALE: 1"=1'

INLET GENERAL NOTES

1. ALL CONCRETE SHALL BE CLASS "A".
2. ALL REINFORCING STEEL SHALL BE GRADE 60.
3. DIMENSIONS RELATING TO REINFORCING STEEL ARE TO CENTERS OF BARS.
4. VERTICAL STEEL MAY BE SPLICED (15" MIN. LAP) IN THE LOWER ONE–HALF OF ALL INLET WALLS.
5. IN AREAS OF CONFLICT BETWEEN REINFORCING STEEL, PIPES AND MANHOLE FRAME THE REINFORCEMENT SHALL BE BENT OR ADJUSTED TO CLEAR AS DIRECTED BY THE ENGINEER.
6. QUANTITIES SHOWN HEREON ARE FOR THE CONTRACTOR'S INFORMATION ONLY. PAYMENT WILL BE MADE FOR EACH INLET OF THE TYPE SPECIFIED, COMPLETE IN PLACE INCLUDING MANHOLE FRAME AND COVER.
7. CHAMFER ALL EXPOSED EDGES 3/4"
8. MANHOLE FRAME AND COVERS SHALL BE FURNISHED WITH THE CAST–ON EYES AND CHAIN AS SHOWN IN THE CAST–ON EYE AND COVER CHAIN DETAILS.
9. THE CONTRACTOR MAY PROPOSE ALTERNATE PROCEDURES FOR THE CONSTRUCTION OF INLETS, INCLUDING PRECAST UNITS. PLANS FOR SUCH PROPOSED ALTERNATES SHALL BE SUBMITTED TO THE ENGINEER FOR REVIEW AND APPROVAL BEFORE CONSTRUCTION.
10. ALL INLET WALLS SHALL BE FORMED EXCEPT WHERE THE NATURE OF THE SURROUNDING MATERIAL IS SUCH THAT IT CAN BE TRIMMED TO A SMOOTH VERTICAL FACE. WHEN INLET WALLS ARE PLACED TO NEAT EXCAVATION LINES THE WALL THICKNESS SHALL NOT EXCEED 10 INCHES.
11. PAYMENT FOR INLETS AT THE CONTRACT PRICE SHALL INCLUDE THE TRANSITION CURB.
12. INVERT OF INLET SHALL BE SLOPED 1:20 WITH FILL CONCRETE.

DETAIL DEPICTS DIMENSIONAL REQUIREMENTS. THE ARCHITECT/ENGINEER ASSUMES RESPONSIBILITY FOR THE APPROPRIATE USE OF THIS STANDARDS.

LAMPASAS TEXAS

STANDARD 10" PRECAST CONCRETE STORM WATER INLET

STANDARD CONSTRUCTION DETAILS
PAVING

DATE:	SCALE:	SHEET:
MARCH 2007	NTS	SD–P25A